This is an uncontrolled copy and will not be kept up to date

Rolls-Royce

# AEROSPACE ENGINEERING SPECIFICATION

| RRES 90036 |
|---|
| First Issued 01 Jul 09 |
| Revised (New) |
| Superseding (Initial Issue) |

## Surface Texture Control

1 SCOPE:

1.1 This specification provides Manufacturing and Inspection with the required technical information to ensure that there is no ambiguity in interpretation of the terms, symbols and values for surface texture control detailed in the Component Definition.

1.2 This interpretation of the subject of surface texture control is based upon the ISO standards referenced below but is intended to provide sufficient detail to render the need for reference to the ISO standards unnecessary. This has been done to avoid ambiguity or interpretation issues.

2 REASON FOR USE:

2.1 To define how surface texture design data shall be interpreted.

3 APPLICABLE DOCUMENTS:

3.1 The supplier shall work to the latest revision of each document unless a specific document issue is specified. When the referenced document has been cancelled and no superseding document has been specified, the last published issue of that document shall apply.

3.2 International Organization for Standardization (ISO) documents, available from International Organization for Standardization, 1, Ch. de la Voie-Creuse, Case Postale 56; CH-1211 Geneva 20, Switzerland: www.iso.org

ISO 1302, 2002 Geometric Product Specification (GPS) Indication of surface texture in technical product documentation

ISO 3274, 1996. Geometrical product specifications (GPS) – Surface texture: Profile method – Nominal characteristics of contact (stylus) instruments

ISO 4287, 1997 Geometric product specifications (GPS) Surface Texture: Profile method terms, definitions and surface texture parameters

ISO 4288, 1996 Geometrical product specifications (GPS) – Surface texture: Profile method – Rules and procedures for the assessment of surface texture

EXPORT CONTROLLED INFORMATION: This document contains technical data whose export is restricted by the Export Administration Act of 1979, as amended (Title 50, U.S.C., App 2401, Et Seq) and is controlled by the Export Administration Regulations (15 CFR parts 730-774) under ECCN EAR 99. Diversion contrary to U.S. export law is prohibited.

PROPRIETARY RIGHTS LEGEND: Information contained herein is the property of and confidential to Rolls-Royce and may not be copied, or communicated to a third party, or used for any purpose other than that for which it is supplied without the express consent of Rolls-Royce. © 2009 Rolls-Royce and its group companies



© Rolls-Royce Plc 2001
This document is the property of Rolls-Royce plc and may not be copied or communicated to a third party or used for any purpose other than for which it is supplied without express written authority of Rolls-Royce plc

Rolls Royce Plc 14-Oct-09 11:14:51 213424 Karl Klenschert

This is an uncontrolled copy and will not be kept up to date



ISO 11562, 1998 Geometrical Product Specifications (GPS). Surface texture: Profile method. Metrological characteristics of phase correct filters

ISO 14253-1, 1996 Geometrical product specifications (GPS) – Inspection by measurement of workpieces and measuring equipment — Part 1: Decision rules for proving conformance or non-conformance with specifications

4 DEFINITION OF TERMS:

The following definitions of terms used in this specification are based on ISO 4287 (1997)

4.1 Lay:

4.1.1 The predominant direction of machining tool or grinding marks producing the surface texture.

4.2 Roughness:

4.2.1 The irregularities of the surface texture which result from the action of the production process.

4.3 Primary profile:

4.3.1 The profile is a measured profile after application of the short wavelength filter λs with the form removed.

4.4 Roughness profile:

4.4.1 Profile derived from the primary profile by suppressing the long wavelength component using a filter with a cut-off length λc.

4.5 Roughness parameter Ra:

4.5.1 The arithmetical average of the departure of the roughness profile above and below the centre mean line is over the prescribed sampling length (ISO 4287). Ra values are identical to CLA - Centre Line Average Values. The American term for the same value is Arithmetical average (AA)

4.6 Sampling length:

4.6.1 This is the length used for identifying the irregularities that characterise the profile under evaluation. The sampling length for the roughness is numerically equal to the characteristic wavelength of the profile filters λc. Standard sampling lengths are:

| MILLIMETRES |
|---|
| 0.08 |
| 0.25 |
| 0.8 |
| 2.5 |
| 8 |
| 25 |



© Rolls-Royce Plc 2001



This document is the property of Rolls-Royce plc and may not be copied or communicated to a third party or used for any purpose other than for which it is supplied without express written authority of Rolls-Royce plc

Rolls Royce Plc 14-Oct-09 11:14:51 213424 Karl Kleinschert

This is an uncontrolled copy and will not be kept up to date



The default length marked * shall be used unless otherwise specified on the Component Definition.

4.7 Evaluation length:

4.7.1 The length in the direction of the traverse of the measuring instrument used for assessing the profile under evaluation. The evaluation length may contain one or more sampling lengths; the default evaluation length is equivalent to 5 sampling lengths.

4.8 Roughness Profile filter:

4.8.1 Filter separates roughness profile from the primary profile, with cut-off length $\lambda c$.

4.9 Phase correction filter:

4.9.1 Profile filter which does not cause phase shifts which lead to asymmetrical profile distortions, the default filter is Gaussian Filter (ISO 11562-1998)

4.10 Cut-off length:

4.10.1 Wavelength of a sinusoidal profile of which 50% of the amplitude is transmitted by the profile filter

4.11 Transmission band:

4.11.1 The band of sinusoidal profile wavelengths are transmitted at more than 50 % when two phase correct filters of different cut-off wavelengths $\lambda s$ & $\lambda c$ are applied to the profile.

4.12 Ra values:

4.12.1 Numerical values for the assessment of surface texture. These values are expressed in micrometres.

TABLE 1 - RECOGNISED Ra MICROMETRE VALUES

| | | | |
|---|---|---|---|
| * 0.025 | * 0.2 | * 0.8 | * 3.2 |
| * 0.05 | 0.25 | 1 | 4 |
| 0.075 | 0.32 | 1.25 | * 6.3 |
| * 0.1 | * 0.4 | * 1.6 | * 12.5 |
| 0.125 | 0.5 | 2 | |
| 0.15 | 0.63 | 2.5 | |

*Preferred values.

4.13 The sampling lengths, evaluation length and roughness Ra parameter for non-periodic profiles (e.g. ground surfaces) are listed below (Table 2).

Rolls Royce Plc 14-Oct-09 11:44:51 213424 Kai Klenschert



© Rolls-Royce Plc 2001



This document is the property of Rolls-Royce plc and may not be copied or communicated to a third party or used for any purpose other than for which it is supplied without express written authority of Rolls-Royce plc

This is an uncontrolled copy and will not be kept up to date



TABLE 2 - SAMPLING AND EVALUATION LENGTHS FOR DIFFERENT Ra SURFACE VALUES

| SURFACE ROUGHNESS Ra: | SAMPLING LENGTH | EVALUATION LENGTH |
|---|---|---|
| µm | mm | mm |
| (0.006)<Ra≤0.02 | 0.08 | 0.4 |
| 0.02 < Ra ≤ 0.1 | 0.25 | 1.25 |
| 0.1 < Ra ≤ 2 | 0.8 | 4 |
| 2 < Ra ≤ 10 | 2.5 | 12.5 |
| 10 < Ra ≤ 80 | 8 | 40 |

5 BACKGROUND:

5.1 RRES 90036 is based upon the ISO standards only. It is intended that this content will provide sufficient detail to render reference to the ISO standards unnecessary thereby avoiding ambiguity or interpretation issues.

6 SURFACE ROUGHNESS GRAPHICAL REPRESENTATION:

6.1 The following drawing/graphical representation for surface texture is in accordance with ISO1302-2002: Geometric Product Specifications (GPS) Indication of Surface Texture in Technical Product documentation.

TABLE 3 – GRAPHIC SYMBOLS

| SYMBOL | INTERPRETATION |
|---|---|
| | This Basic symbol means finish by any production method.<br>If the same surface texture is required on a large number of surfaces of a part, the basic symbol may be used on the appropriate surface and its meaning given in a general note. |
| | This expanded symbol means that machining is obligatory.<br>Material has to be removed by machining (cutting), abrading, electro or electro-chemical disintegration. |
| | The expanded symbol means that the removal of material from the indicated surface is prohibited. This symbol may be used on a drawing relating to a production process to indicate a surface that is to be left in the state resulting from a preceding process, whether achieved by the removal of material or otherwise. |

Rolls Royce Plc
14-Oct-09
11:44:51
21 Sitzkamp
Kai Kirschner



© Rolls-Royce Plc 2001



This document is the property of Rolls-Royce plc and may not be copied or communicated to a third party or used for any purpose other than for which it is supplied without express written authority of Rolls-Royce plc

This is an uncontrolled copy and will not be kept up to date



6.2 Position of complementary surface texture requirements

There are a number of mandatory positions for the various surface texture requirements and these are placed on the graphical symbol as detailed below.

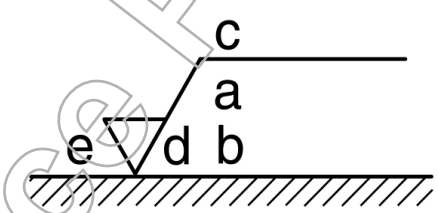


Position a - roughness value Ra in micrometres; Position b – two or more surface texture requirements; Position c – manufacturing method; Position d – surface lay and orientation; Position e – machining allowance.

6.3 Position and orientation of graphic symbols and its annotation

6.3.1 Direction of reading of surface texture requirements

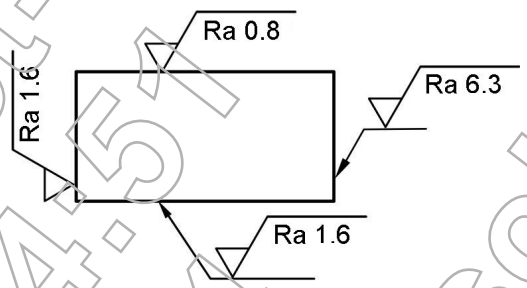


6.3.2 Surface texture requirements on contour line representing the surface

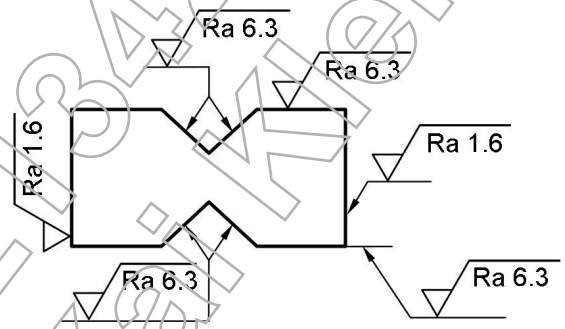


For more information see Appendix A.

Rolls Royce Plc 14-Oct-09 11:44:51 213424 Karl Klenschert



© Rolls-Royce Plc 2001



This document is the property of Rolls-Royce plc and may not be copied or communicated to a third party or used for any purpose other than for which it is supplied without express written authority of Rolls-Royce plc

This is an uncontrolled copy and will not be kept up to date



TABLE 4 – GRAPHIC SYMBOLS WITH INDICATION OF SURFACE TEXTURE (ROUGHNESS RA)

| Symbol | Interpretation |
|---|---|
| Ra 0.4 | The process is not permitted to remove material, unilateral upper specification limit, default transmission band (0.0025mm to 0.8mm), maximum Ra 0.4 µm, evaluation length of 5 sampling lengths (default) |
| Ramax 0.2 | The process shall remove material, unilateral upper specification limit, default transmission band (0.0025mm to 0.8mm), maximum Ra of roughness 0.2 µm, evaluation length of 5 sampling lengths (default), "max-rule" |
| 0.008-0.8 / Ra 3.2 | The process shall remove material, unilateral upper specification limit, transmission band 0.008 – 0.8 mm, arithmetic mean deviation Ra 3.2 µm, evaluation length of 5 sampling lengths (default) |
| -0.8 / Ra3 1.6 | The process shall remove material, unilateral upper specification limit, transmission band: sampling length 0.8 mm (λs default 0.0025 mm) according to ISO 3274-1996, *R*a is 1.6 µm, evaluation length of 3 sampling lengths |
| U Ramax 1.6<br>L Ra 0.4 | The process is not permitted to remove material, double-sided upper and lower specification limits, default transmission band for both limits, upper limit: Ra 1.6 µm, evaluation length of 5 sampling lengths (default), "max-rule", lower limit: Ra is 0.4 µm, evaluation length of 5 sampling lengths (default) |
| turned<br>Ra 1.6 | This is an instance where the design requirements can only be met by the specific operations, turning. In this case the required method of manufacture will be indicated adjacent to the roughness symbol and value. |
| milled<br>Ra 3.2<br>⊥ | This is an instance where the design requirements can only be met by the specific operations, milling. This indication also shows that the lay direction is perpendicular to the plane of projection of the view in which the symbol is used |

Rolls Royce Plc
14 Oct 09
11:41:51
213424
Karl Kienschen



© Rolls-Royce Plc 2001



This document is the property of Rolls-Royce plc and may not be copied or communicated to a third party or used for any purpose other than for which it is supplied without express written authority of Rolls-Royce plc

This is an uncontrolled copy and will not be kept up to date



TABLE 5 - GRAPHIC SYMBOLS WITH INDICATION OF SURFACE LAY

| | |
|---|---|
| | Normally the shape of the part will determine its method of manufacture and resulting 'direction of lay'. If a particular direction of lay is a design requirement, it will be indicated on the design definition. |
| C | 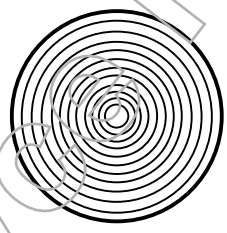 The lay shall be in approximately concentric rings. The lattice type of lay produced by grinding with the side of wheel is unacceptable when circular lay is specified, but the gramophone record lay produced by normal 'in feed' is acceptable. |
| = | The lay is to be approximately parallel to the line representing the surface to which the symbol is applied. |
| ⊥ | 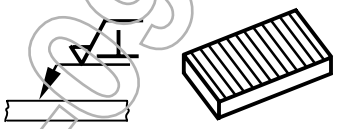 The lay is to be approximately perpendicular to the line representing the surface to which the symbol is applied. |
| X | 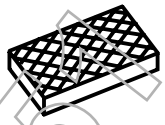 The lay is to be angular in both directions. |
| R | 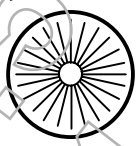 The lay is to be approximately radial with respect to the centre. |
| M | 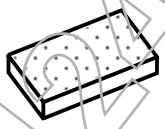 The lay shall be multi-directional having no predominant direction, i.e. superfinishing. |
| MS | The lay shall be radial with respect to the centre of the component and shall be uniform across the bolt hole and an area not less than 1 hole diameter either side. Cross-hatched lay in the areas between that specified above is acceptable. |

Rolls Royce plc 14-Oct-09 11:44:54 212424 Kai Kienscherf



© Rolls-Royce Plc 2001



This document is the property of Rolls-Royce plc and may not be copied or communicated to a third party or used for any purpose other than for which it is supplied without express written authority of Rolls-Royce plc

This is an uncontrolled copy and will not be kept up to date



6.3.3 Unspecified machined surfaces

6.3.3.1 Certain readily identifiable features will not normally have a surface texture value specified on the Component Definition. These surfaces shall be controlled to the values indicated below. These values except for Screw Threads, do not apply to Compressor and Turbine Shafts and Discs. For these items the surface texture shall be as specified in the general note on the drawing.

| | |
|---|---|
| Screw threads - | Rolled 0.8 |
| Ground | 0.8 |
| Die cut | 1.6 |
| Turned | 1.6 |
| Milled | 2 |
| Counterbores less than 16mm Diameter or 3.5 mm deep | 4 |
| Countersinks less than 16 mm Diameter or 6 mm deep | 4 |
| Centre drill holes | 4 |
| Keyways | 4 |
| Spannering hexagons | 6.3 |
| Ends of bolts, studs, dowels, pins and springs | 6.3 |
| Identification pips on ends of bolts and studs | 6.3 |
| Punched, swaged, extruded or sheared surfaces | 12.5 |
| Coarse clearance holes 13 mm diameter or less | 4 |

Chamfers, fillet radii and tool run-out will be taken as having the same value as the roughest adjacent surface, unless otherwise specified on the Component Definition.

Rolls Royce plc 14-Oct-09 11:44:51 213424 Kai Kienscherf



© Rolls-Royce Plc 2001



This document is the property of Rolls-Royce plc and may not be copied or communicated to a third party or used for any purpose other than for which it is supplied without express written authority of Rolls-Royce plc

This is an uncontrolled copy and will not be kept up to date



6.4 Unspecified unmachined surfaces:

6.4.1 These surfaces and the relevant roughness values are as follows. These values apply after emery dressing, abrasive blasting, polishing, barrelling etc as applicable.

Cast surfaces

| | |
|---|---|
| Sand casting | 12.5 |
| Die casting | 3.2 |
| Investment casting | 6.3 |

Forged surfaces 12.5

Sheet metal

| | |
|---|---|
| Cold rolled | 2 |
| Hot rolled | 4 |

| | | |
|---|---|---|
| Tubing | These surfaces shall be free from scratches, grooves and any similar surface defect | 0.8 |
| Wire | Wire used in helical springs and for any locking purposes shall be free from seams, grooves and any similar surface defect | 0.8 |

Wire used for beading is not considered to be within this category and therefore it is not essential to apply surface texture control.

Moulded surfaces of Bakelite, PTFE, Tufnol etc 4

6.4.2 If a particular design requires a surface texture different from the foregoing values, the required value will be specified on the Component Definition by the appropriate symbol or in note form.

6.5 Processes affecting texture values:

6.5.1 Surface texture values apply subsequent to any processing with the following exceptions:

- Plated surfaces not subsequently machined
- Coated surfaces not subsequently machined
- Shot Peened surfaces
- Painted or varnished surfaces
- Vapour blasted surfaces

In these cases the surface texture values apply before processing.

Rolls Royce Plc 14-Oct-09 11:44:51 213424 Kai Kleinschert



© Rolls-Royce Plc 2001



This document is the property of Rolls-Royce plc and may not be copied or communicated to a third party or used for any purpose other than for which it is supplied without express written authority of Rolls-Royce plc

This is an uncontrolled copy and will not be kept up to date



6.6 Interpretation of values:

6.6.1 The Ra values specified are not to be used in the same manner as a linear tolerance. An inspector must be satisfied that the surface is of uniform texture, but when an instrument indicates that the roughness is within the value specified, the component is acceptable unless the inspector has reason for rejection on the grounds of adverse effect of the texture of the surface in relation to the function of the component in its engine environment, e.g. sealing surfaces should be free from radial scratches and other potential leak paths. A simplified procedure for surface roughness inspection is given in Appendix B

6.6.2 Any issues regarding the texture values specified on the Component Definition should be referred to the Design Standards Department.

6.7 Roughness numbers:

6.7.1 Some external supplier drawings may specify surface texture by roughness numbers N1 to N12 inclusive instead of micrometres. The following table gives the relative micrometre and roughness number values.

TABLE 6 – RELATIVE MICROMETRE AND ROUGHNESS NUMBER VALUES

| RA VALUES MICROMETRE | ROUGHNESS NUMBER |
|---|---|
| 50 | N12 |
| 25 | N11 |
| 12.5 | N10 |
| 6.3 | N9 |
| 3.2 | N8 |
| 1.6 | N7 |
| 0.8 | N6 |
| 0.4 | N5 |
| 0.2 | N4 |
| 0.1 | N3 |
| 0.05 | N2 |
| 0.025 | N1 |

Rolls Royce plc 14-Oct-09 11:44:51 213424 Kai Klenschert



© Rolls-Royce Plc 2001



This document is the property of Rolls-Royce plc and may not be copied or communicated to a third party or used for any purpose other than for which it is supplied without express written authority of Rolls-Royce plc

This is an uncontrolled copy and will not be kept up to date



7 ASSESSMENT OF SURFACE TEXTURE:

7.1 Measuring equipment:

7.1.1 The recommended measuring equipment that shall be used for surface texture measurement will be of the traversing stylus type. Where practicable, this shall be a bench-mounted instrument. If the component form or size makes this impracticable then a portable instrument may be used. A portable instrument shall be used only in conjunction with appropriate fixturing to support the measuring head.

7.1.2 The application of non contact techniques such as optical interferometers, confocal microscopes is allowable when extremely smooth surfaces need to be characterised or where surfaces would otherwise be damaged by contact techniques or occasions where on-machine techniques are applied. However, whenever non-contact measuring equipment is used, traceability to national standards must be determined.

TABLE 7 - INDICATIVE COMPARISON BETWEEN CONVENTIONAL INSTRUMENT TYPES

| Instrument Type | Instrument Characteristics | *Application* | *Vertical* | | *Lateral* | |
|---|---|---|---|---|---|---|
| | | | *Range* | *Resolution* | *Resolution* | *Range* |
| Contacting Stylus | Traditional proflie method<br>Tactile technique,<br>Possible damage to soft surfaces<br>Slow in areal mode,<br>Fully traceable | Machined surface roughness >0.1um Ra | Up to 12.5 mm | Down to 1nm | 2um [1] | 100 x 100 mm |
| *Optical Interferometery* | Non contacting<br>Fast, measurement<br>Areal Measurement as norm<br>slope limited | Smooth surface roughness <0.1um Sa | Up to 500um | Down to 0.05nm | 0.25um [2] | 7 x7 mm [2] |
| Confocal Microscopy | Large range<br>Fast scanning<br>limited resolution,<br>slope limitations | Surface feature metrology | Up to 3mm | *Down to* 100nm | 1um | 100 x100 mm |
| Confocal Microscopy (Vertical Focus-Variation Scanning) | Large vertical range<br>limited resolution,<br>Excellent slope measurement up to 90°. Not suitable for smooth surfaces <0.05 um Sa | Surface feature metrology steep sloped features | Up to 8mm | *Down to* 200nm | 0.4um [2] | 5 x 5 mm [2] |

[1] Dependent on stylus radius, [2] Dependent on Numerical Aperture of lens

A comparison of the amplitude-wavelength working space for stylus and optical instruments is given in Appendix C.



© Rolls-Royce Plc 2001



This document is the property of Rolls-Royce plc and may not be copied or communicated to a third party or used for any purpose other than for which it is supplied without express written authority of Rolls-Royce plc

This is an uncontrolled copy and will not be kept up to date



7.2 Measurement Parameters traversing stylus type:

The measurement parameters for traversing stylus type instruments shall be set in accordance with ISO 4288-1998. For convenience, a summary table is reproduced below.

TABLE 8 – MEASUREMENT PARAMETERS

| | $R_{Tip}$ = maximum probe tip radius.<br>$l_r$ = sampling length<br>$l_n$ = evaluation length.<br>$l_t$ = stylus travel (evaluation length plus start and finish lengths) | | | |
|---|---|---|---|---|
| Ra (microns) | $R_{TIP}$ (microns) | $\lambda_c = l_r$ (mm) | $l_n$ (mm) | $l_t$ (mm) |
| 0.006 – 0.02 | 2 | 0.08 | 0.4 | 0.48 |
| 0.02 – 0.1 | 2 | 0.25 | 1.25 | 1.5 |
| 0.1 - 2 | 5 | 0.8 | 4 | 4.8 |
| 2 - 10 | 5 | 2.5 | 12.5 | 15 |
| 10 - 80 | 10 | 8 | 40 | 48 |

$\lambda_C$ = the cut-off wavelength selected

7.3 Capability of surface finish measurement:

7.3.1 The capability of the surface roughness measurement for a particular feature shall be determined by Gauge R&R studies. Note that the repeatability of the surface roughness measurement on a single part will depend on the repeatability of the part fixturing and the short range (local) variation in surface roughness on the part. If local variation exists in the surface roughness the surface roughness can be assessed using the max rule ISO 4288:1996 to improve the repeatability of the measurement.

7.4 Direction of measurement:

7.4.1 The direction in which the measurement is made should be at right angles to the lay, unless otherwise specified on the Component Definition.

NOTE: When measuring blade and NGV aerofoil and annulus surfaces the method referenced in the local process documentation may be applied.

7.5 Rules for comparison of the measured values with the tolerance limits:

7.5.1 Areas on the feature to be inspected

7.5.1.1 The surface texture of the workpiece under inspection can appear homogeneous or be quite different over various areas. This can be seen by visual examination of the surface. In cases where the surface texture appears homogeneous, parameter values determined over the entire surface shall be used for comparison with the requirements specified on the drawings or in the technical product documentation.

7.5.1.2 If there are separate areas with obviously different surface texture, the parameter values which are determined on each area shall be used separately for comparison with the requirements specified on the drawings or in the technical product documentation.

7.5.1.3 For requirements specified by the upper limit of the parameter, those separate areas of the surface shall be used which appear to have the maximum parameter value.



© Rolls-Royce Plc 2001



This document is the property of Rolls-Royce plc and may not be copied or communicated to a third party or used for any purpose other than for which it is supplied without express written authority of Rolls-Royce plc

Rolls-Royce Plc 14-Oct-09 11:44:31 GMT 2134224 Karl Kleinschmitt

This is an uncontrolled copy and will not be kept up to date



7.5.2 The max.-rule:

7.5.2.1 For requirements specified by the maximum value of the parameter during inspection, none of the measured values of the parameter over the entire surface under inspection shall exceed the value specified on the drawings or in the technical product documentation.

7.5.2.2 To designate the maximum permissible value of the parameter, the “max.” index has to be added to the symbol of the parameter (for example *Ra* max1).

7.5.3 Uncertainty of measurement

7.5.3.1 For proving conformance or non-conformance with specification, measured values of parameters shall be compared with the specified limiting values taking into account the uncertainty of measurement according to the rules given in ISO 14253-1-1999. In case of comparing results of measurement with upper and lower limits, the uncertainty of measurement shall be estimated without taking into account the homogeneity in the surface.

7.6 Tactile and visual checking:

7.6.1 All human tactile and visual measurements should be avoided. However, if tactile and visual checking has to be employed, surface texture specimens or sample parts, should be made available for comparison purposes. Comparison by visual methods alone can be misleading and the surfaces should be verified by feel. In this case the best comparative assessment is made using the fingernail.

7.6.2 It is preferable that surface texture specimens should be of similar material, shape and method of manufacture to the part being checked. For example, it is exceedingly difficult to assess a turned aluminium surface against a ground flat steel surface.

7.6.3 Surface being compared should be clean and free from grease, as the presence of varying degrees of greasiness on a surface can be misleading.

7.6.4 In order to maintain consistent assessment of surface roughness by visual means, when magnification is required it is recommended that an X3 glass is used.

8 NOTES:

8.1 None.

Rolls Royce Plc 14-Oct-09 11:44:51 213424 Kai Klenschen



© Rolls-Royce Plc 2001



This document is the property of Rolls-Royce plc and may not be copied or communicated to a third party or used for any purpose other than for which it is supplied without express written authority of Rolls-Royce plc

This is an uncontrolled copy and will not be kept up to date



APPENDIX A - FURTHER EXAMPLES OF SURFACE TEXTURE SYMBOLS AND INDICATIONS:

A.1 Surface texture requirements on the contour line that represents the surface

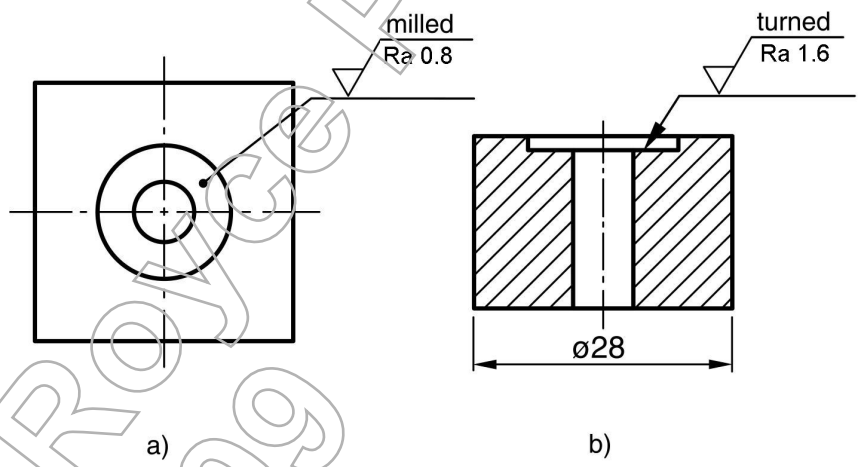


A.2 Surface texture requirement – Feature-of-size dimension

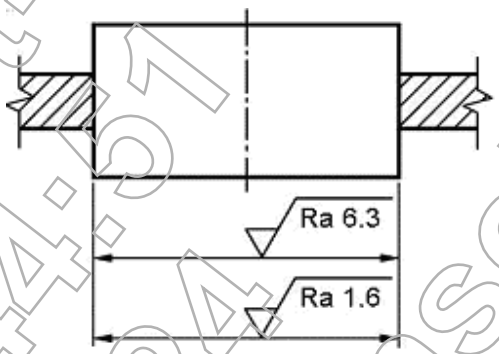


A.3 Surface texture requirement - Geometrical tolerances indication

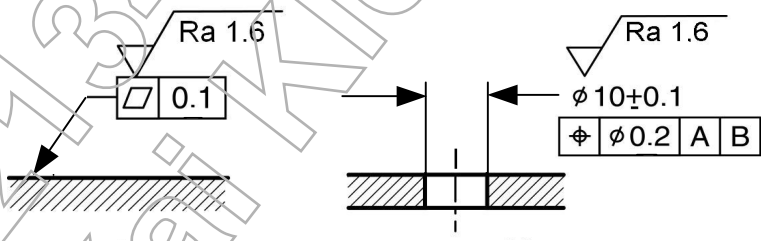


Rolls Royce Plc 14-Oct-09 11:44:51 213424 Kai Klenschert



© Rolls-Royce Plc 2001



This document is the property of Rolls-Royce plc and may not be copied or communicated to a third party or used for any purpose other than for which it is supplied without express written authority of Rolls-Royce plc

This is an uncontrolled copy and will not be kept up to date



A.4 Surface texture requirements - Extension lines of cylindrical features

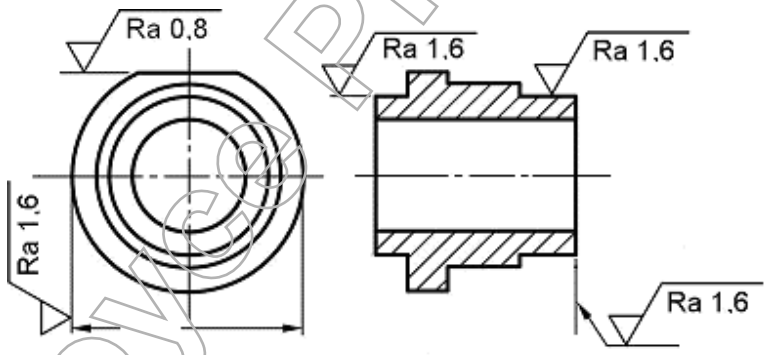


A.5 Surface texture requirements - Cylindrical and prismatic surfaces

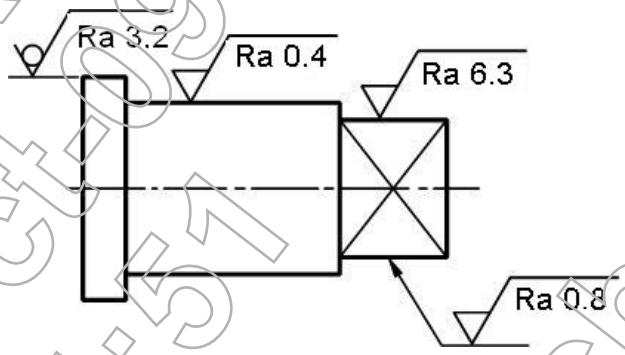


A.6 Simplified indication - Majority of surfaces have the same required surface texture

A.6.1 When a majority of surfaces have the same required surface texture, a general note will be used and the exceptions to the general note will be specified on the item as shown in the figure below.

ALL SURFACES Ra 3.2 UOS.

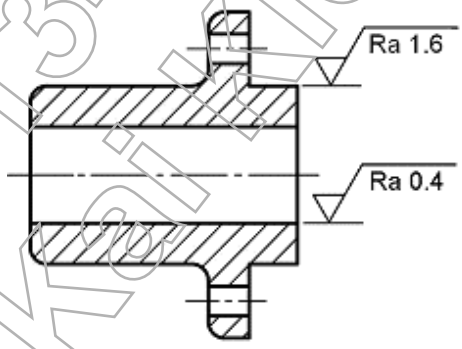




© Rolls-Royce Plc 2001



This document is the property of Rolls-Royce plc and may not be copied or communicated to a third party or used for any purpose other than for which it is supplied without express written authority of Rolls-Royce plc

Rolls Royce Plc 14-Oct-09 11:44:51 213424 Kai Hemschert

This is an uncontrolled copy and will not be kept up to date



A.7 Reference indication in case of minimal drawing space

A.7.1 Notes similar to the following would be in the general note section.

SURFACES MARKED z TO BE U Ra 1.6 / L Ra 0.8

SURFACES MARKED y TO BE Ra 3.2

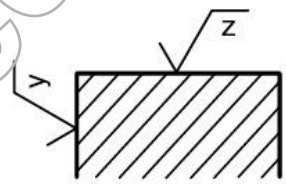


A.8 Indication of surface texture requirement before and after treatment (in this case coating)

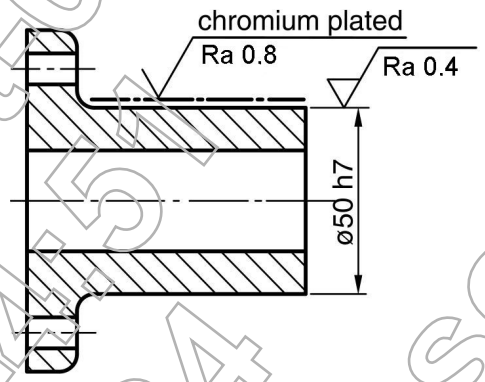


Rolls Royce plc 14-Oct-09 11:44:55 213424 Kai Klenschert



© Rolls-Royce Plc 2001



This document is the property of Rolls-Royce plc and may not be copied or communicated to a third party or used for any purpose other than for which it is supplied without express written authority of Rolls-Royce plc

This is an uncontrolled copy and will not be kept up to date



## APPENDIX B - SIMPLIFIED PROCEDURE FOR ROUGHNESS INSPECTION

B.1 GENERAL:

B.1.1 The following example illustrates one of a number of methods of roughness inspection.

B.1.2 It shall be recognized that this procedure is only an approximation to the full procedure defined in the main body of ISO 4288-1996.

B.2 VISUAL TEST

B.2.1 Visually inspect workpiece surfaces to select those areas where it is obvious that inspection by more precise methods is necessary, for example because the roughness is obviously better or obviously worse than that specified, or because a defect which substantially influences the function of the surface is present.

B.2.2 If the visual test does not allow a decision to be taken, tactile and visual comparisons with roughness comparison specimens may be carried out.

B.3 Measurement test

B.3.1 If the comparison test does not allow a decision to be taken, measurement should be carried out, using a contacting stylus type instrument in the area where the critical values can be expected.

B.3.2 Where the indicated parameter symbol **does not** contain the suffix "max", the surface will be accepted and the test procedure stopped if

a) The first measured value does not exceed 70% of the specified value (indicated on the drawing);

b) The first three measured values do not exceed the specified value; (recommended procedure)

c) Not more than one of the first six measured values exceeds the specified value;

d) Not more than two of the first twelve measured values exceed the specified value;

Otherwise the work piece is to be rejected.

B.3.3 Sometimes, for example before rejecting high-value work pieces, more than 12 measurements may be taken, e.g. for 25 measurements then no more than four shall exceed the specified value.

B.3.4 Where the indicated parameter symbol **does contain** the suffix "max", usually at least three measurements are taken, either from that part of the surface from which the highest values are expected (for example where a particularly deep groove is visible), or equally spaced if the surface gives the impression of homogeneity.

B.3.5 The most reliable results of roughness inspection are achieved using measuring instruments. The inspection of critical features should always be performed using measuring instruments.

Rolls-Royce Plc 14-Oct-09 11:44:51 213424 Karl Kienscherf



© Rolls-Royce Plc 2001



This document is the property of Rolls-Royce plc and may not be copied or communicated to a third party or used for any purpose other than for which it is supplied without express written authority of Rolls-Royce plc

This is an uncontrolled copy and will not be kept up to date



Simplified Procedure for Surface Roughness Inspection

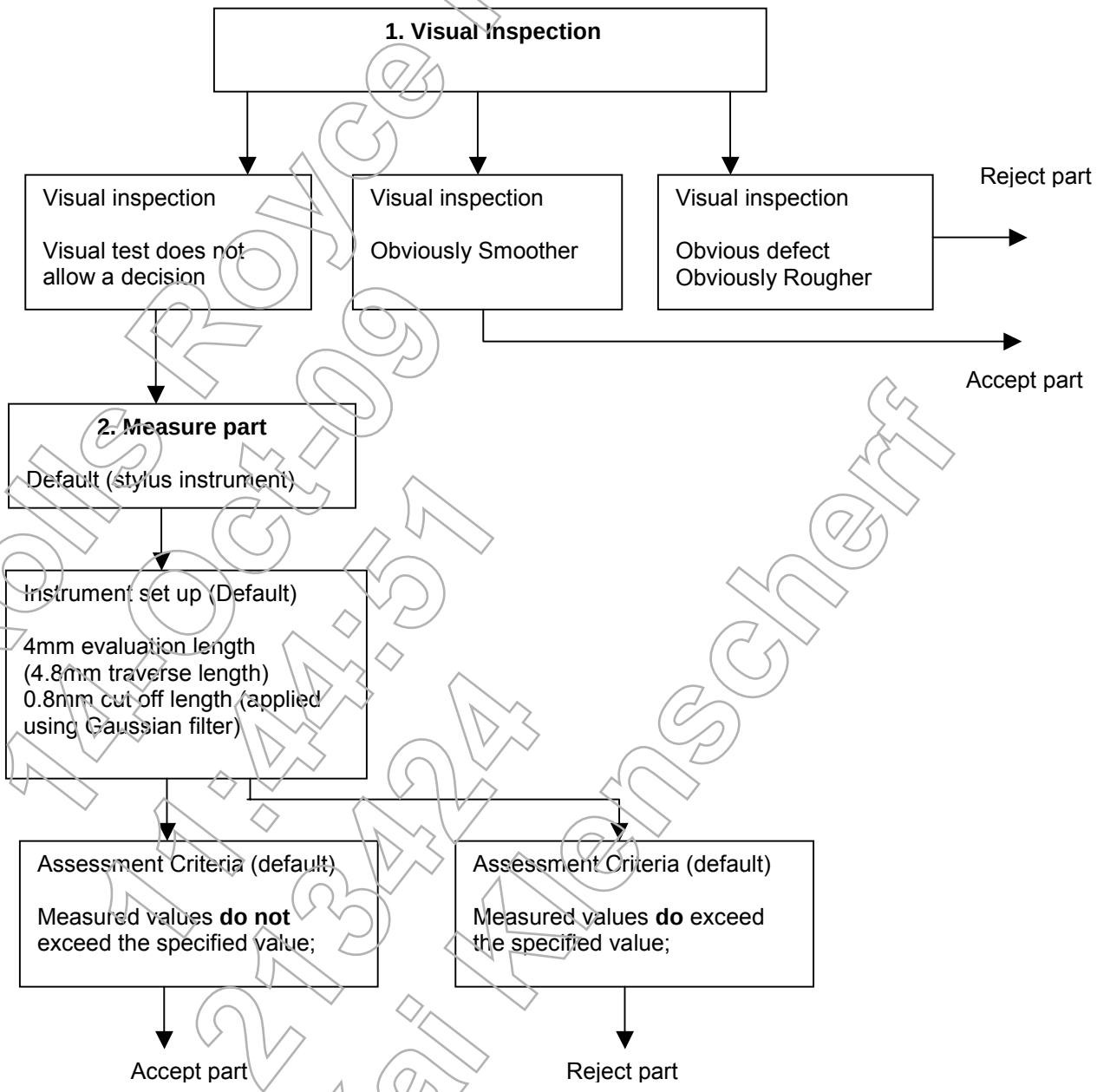


Rolls-Royce Plc
14-Oct-09
11:44:51
213424
Kai Kienscherf



© Rolls-Royce Plc 2001



This document is the property of Rolls-Royce plc and may not be copied or communicated to a third party or used for any purpose other than for which it is supplied without express written authority of Rolls-Royce plc

This is an uncontrolled copy and will not be kept up to date



APPENDIX C - COMPARISON OF THE AMPLITUDE WORKING SPACE FOR TRAVERSING STYLUS TYPE INSTRUMENTS AND OPTICAL INSTRUMENTS.

C.1 It is useful to be able to compare the measurement performance of different surface measurement instrument types. A convenient way to do this is to use an amplitude wavelength plot. The plot represents the response of the instrument to measuring a sinusoidal surface and illustrates a working area for the instrument. Features with amplitude and wavelength dimensions within the plot area should be able to be measured.

C.2 The boundaries of the plot represent the resolution of the instruments lower horizontal line. The range of the instrument is represented by the upper horizontal line on the plot. The minimum and maximum wavelengths that can be measured are represented by the vertical lines on the plot. The maximum slope and smallest curvature that can be measured are represented by the sloping lines on the plot.

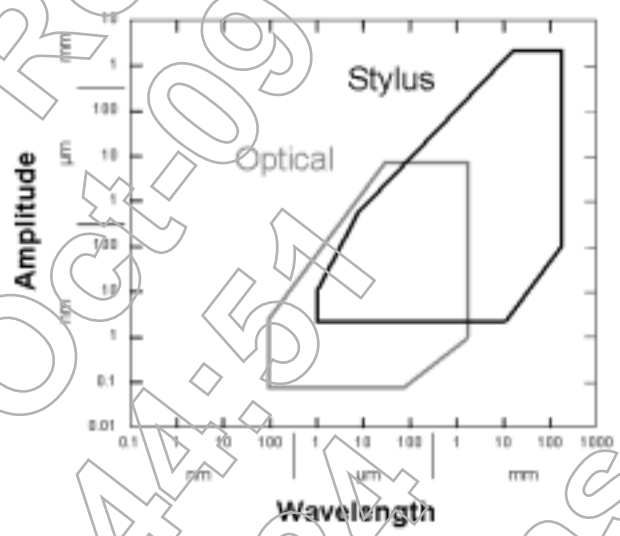


Rolls Royce plc
14-Oct-09
11:44:54
213424
Kai Klenschert



© Rolls-Royce Plc 2001



This document is the property of Rolls-Royce plc and may not be copied or communicated to a third party or used for any purpose other than for which it is supplied without express written authority of Rolls-Royce plc